RCA VICTOR MODELS C9-4 and T9-10

Nine-Tube, Three-Band, A-C, Superheterodyne Receivers

TECHNICAL INFORMATION

Electrical Specifications

Frequency Ranges

Band A.....540-1,800 kc.
Band B.....1,800-6,000 kc.
Band C.....6,000-18,000 kc.

Alignment Frequencies

Band A...600 kc. (osc.), 1,720 kc. (osc., det., ant.)
Band B.....6,132 kc. (osc., det., ant.)
Band C.....18,000 kc. (osc., det., ant.)

Intermediate Frequency.....460 kc.

Radiotron Complement

(1) RCA-6K7.....Radio-Frequency Amplifier
(2) RCA-6L7.....First Detector
(3) RCA-6J7.....Heterodyne Oscillator
(4) RCA-6K7.....Intermediate Amplifier
(5) RCA-6H6.....Second Detector and A.V.C.
(6) RCA-6F5.....Audio Amplifier
(7) RCA-6F6.....Power Output Amplifier
(8) RCA-5Z4.....Full Wave Rectifier
(9) RCA-6E5.....Tuning Indicator

Power Supply Ratings

Rating A.....105-125 volts, 50-60 cycles, 105 watts
Rating B.....105-125 volts, 25-60 cycles, 105 watts
Rating C.....100-130/140-160/195-250 volts, 40-60 cycles, 105 watts

Loudspeaker

Type.....Electrodynamic
Voice Coil Impedance.....2¼ Ohms at 400 Cycles

Power Output Ratings

Undistorted.....2 Watts
Maximum.....4½ Watts

Mechanical Specifications

	Model C9-4	Model T9-10
Height	40 inches	22¼ inches
Width	26 inches	16½ inches
Depth	12½ inches	11¾ inches
Weight (Net)	57 pounds	34 pounds
Weight (Shipping)	72 pounds	39 pounds
Chassis Base Dimensions	14½ inches x 9 inches x 3½ inches	

General Description

These two models each employ the same type of chassis and are similar to the original RCA Victor Model C9-4. The main changes consist of the following: (1) An RCA-5Z4 metal rectifier is used in place of the RCA-5Z3 glass rectifier, and (2) a Speech-Music Control is added to the compensated volume control circuit and is actuated by the same knob as the power switch. The Console Model (C9-4) employs a 12-inch dynamic loudspeaker and the Table Model (T9-10) employs an 8-inch dynamic loudspeaker.

Service Data

All Service Data contained in the Service Notes for RCA Victor Model C9-4 are directly applicable to these instruments except the Schematic Diagram, Wiring Diagram, and Replacement Parts. Other differences not illustrated are as follows:

Universal Transformer d-c resistance (Figure 7 of C9-4 Service Note).

Primary Winding 17.3 ohms total.

Secondary Winding 400 ohms total.

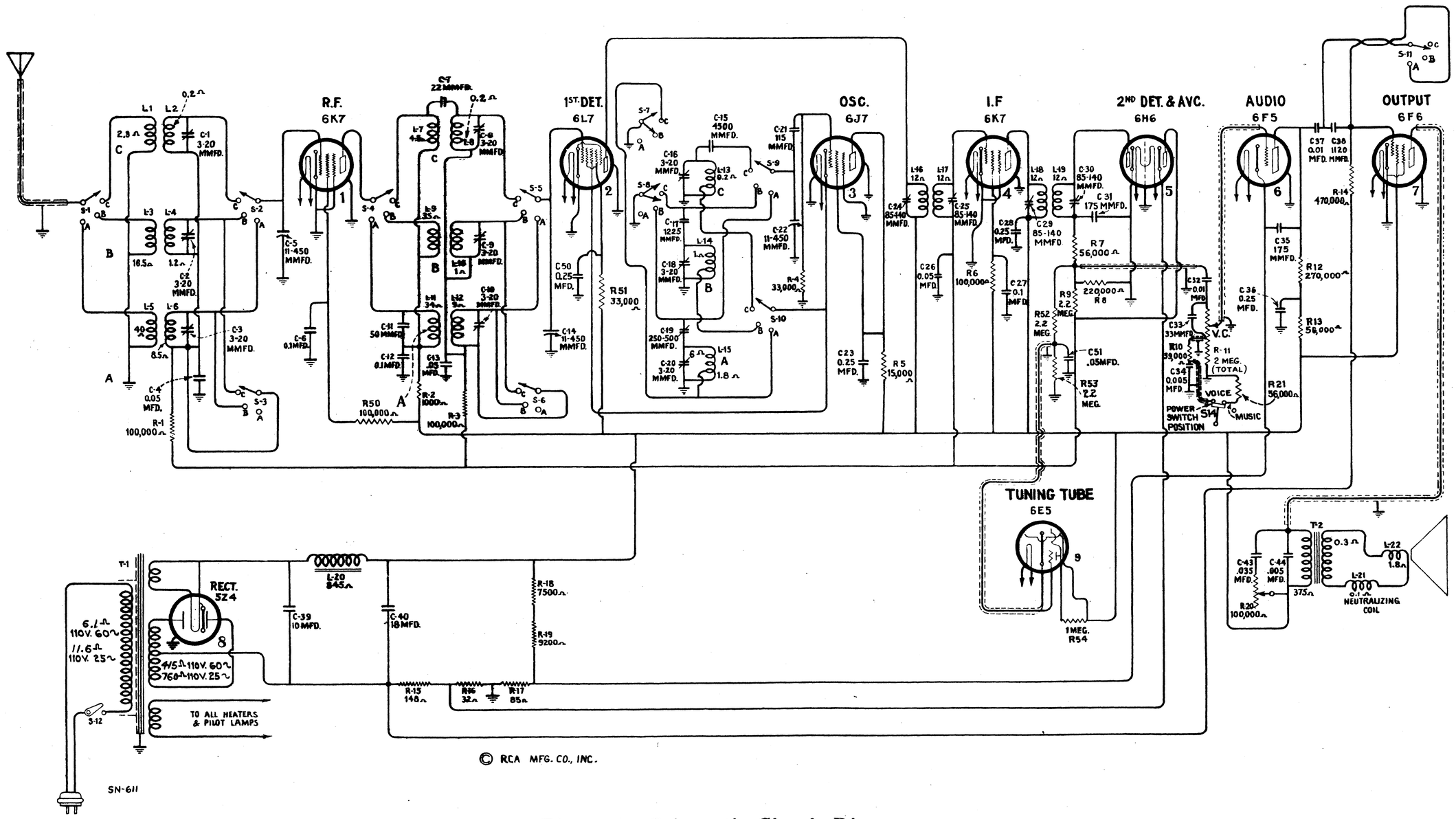

Figure 1—Schematic Circuit Diagram

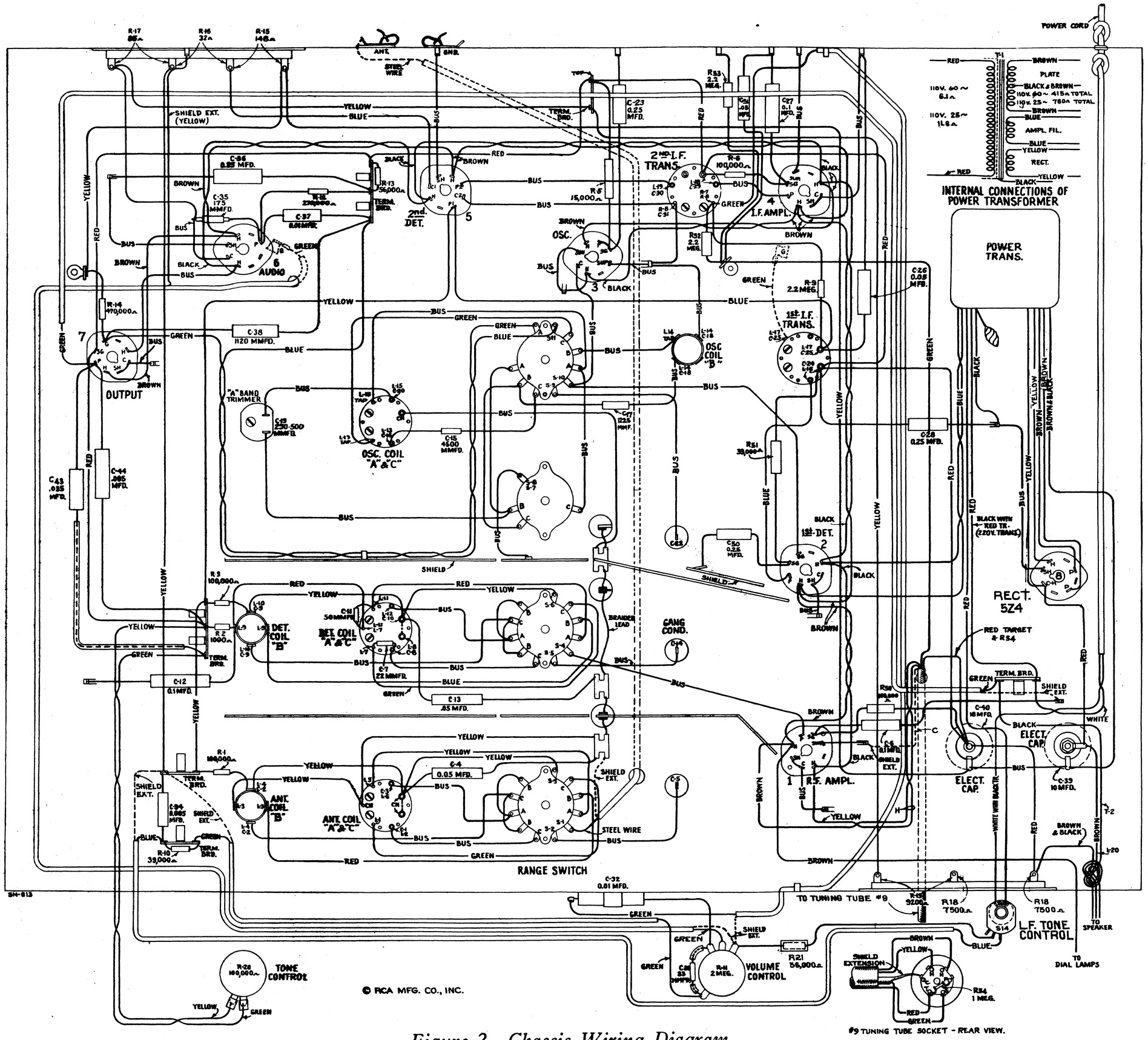

Figure 2—Chassis Wiring Diagram

Dial Drive

An open face airplane type of dial is used. Each scale has a band of color adjacent to its graduations and three short strips of corresponding colors at the lower part of the dial for index purposes. An index pointer, which moves as the band switch is rotated, points to one of these colors to identify the band in use. The drive mechanism is variable, there being either a 50 to 1 or 10 to 1 ratio available between the tuning knob and condenser drive shaft.

Tuning Indicator

A cathode-ray tube is used as a means of visually indicating when the receiver is accurately tuned to the incoming signal. This tube is of new design and comprises an amplifier section and a cathode-ray section built in the same glass envelope. The cathode-ray section consists of a conically shaped luminescent screen, upon which a pattern is formed by an effect of the detected signal after said effect has been amplified by the amplifier section which is fed from the detector diode circuit. The size of the pattern is determined by the strength of the signal voltage, so that any change of tuning may be readily observed in order to facilitate tuning to exact resonance.

CIRCUIT FEATURES

The circuit is based upon the Superheterodyne principle. The three ranges of tuning are covered by three sets of coils. A single r-f stage provides the desired selectivity and gain ahead of the hexode first detector tube. The oscillator stage operates separately from the first detector. A single stage i-f system is employed. Its basic frequency is 460 kc. Diode detection is performed by a double diode RCA-6H6 Radiotron. Automatic volume control is provided by this same tube. The audio system consists of two stages, one an RCA-6F5, and the output, an RCA-6F6. High voltages for plate and bias supplies are obtained from an RCA-5Z3 full wave rectifier through an efficient filter. The field of the loudspeaker acts as a reactor in the filter circuit. Further details of the circuit are as follows:—

Oscillator

The oscillator circuit has extreme stability of frequency and good uniformity of output over the tuning ranges. These qualities assure that the tuning of the receiver will not drift as the line voltage varies. The action of the circuit is such that when the cathode emission tends to change with line voltage or because of other reasons, the variation of voltage drop in the plate and screen resistor restores the operating characteristics of the tube to normal and thus maintains constancy of the generated signal.

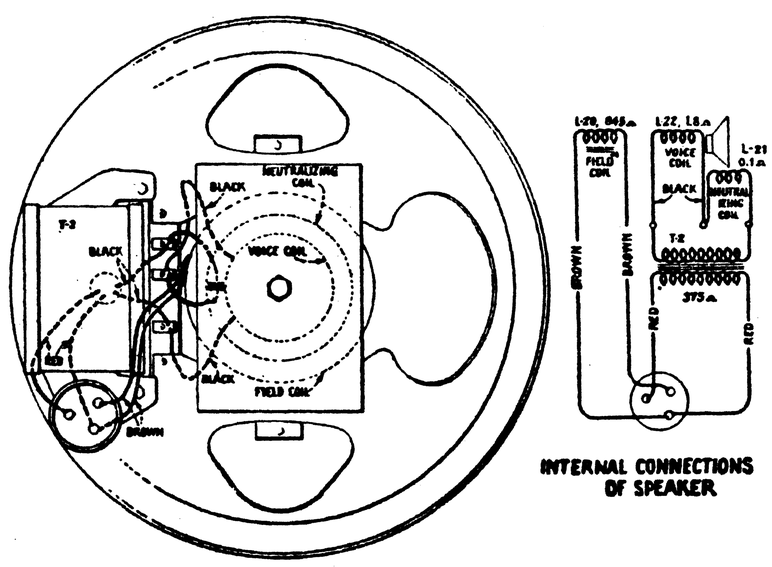

Figure 3—Loudspeaker Wiring

First Detector

This stage has unusually good high frequency mixing efficiency. The tube used, an RCA-6L7, is a new hexode type. The signal is supplied to the first control grid and the oscillator voltage is fed in on a second control grid, a screen grid separating the two. The arrangement of the grids prevents degenerative difficulties, particularly at the higher frequencies. The second grid is direct-connected to the cathode of the oscillator and has no d-c bias.

Compensated Volume Control

The variation in response of the human ear with different degrees of volume is compensated for by a resistor and condenser network in the manual volume control circuit. The volume control itself is an acoustically tapered potentiometer which provides equal changes of sound intensity for the listener per degree of rotation.

Range Switch

The band change switch has several functions. It exchanges the antenna, detector and oscillator coils in order to select the range desired. At the same time, it shorts out the unused coils so as to eliminate their absorptive effects. It also varies the fidelity by shorting a coupling condenser in the audio system to provide the desired reproduction for short as well as long wave reception.

Tone Control

Provision is included for variable reduction of high frequencies. This consists of a resistor and condenser combination across the primary winding of the output transformer, the resistor being the variable element. As it is decreased, the high frequency response limit is lowered.

Power System

The power transformer has its primary winding capacitively shielded from its secondary windings to eliminate transfer of line disturbances into the receiver and to stop any tendency for the circuit to radiate into the line. Rectification is performed in the usual manner by a full wave tube.

Detection and A.V.C.

The modulated signal as obtained from the output of the i-f system is detected by an RCA-6H6 double diode tube. The audio frequency secured by this process is passed on to the a-f system for amplification and final reproduction. The d-c voltage which results from detection of the signal is used for automatic volume control. This voltage, which develops across resistor R-8, is applied as automatic control grid bias to the r-f, first detector and i-f tubes through suitable resistance-capacitance filter circuits. The second diode of the RCA-6H6 is used to supply residual bias for

these controlled tubes under conditions of little or no signal. This diode, under such conditions, draws current, which flows through R-9 and R-8, thereby maintaining the desired minimum operating bias on such tubes. On application of signal energy above a certain level, however, the auxiliary bias diode ceases to draw current and the a.v.c. diode takes over the biasing function.

SERVICE DATA

The various diagrams of this booklet contain such information as will be needed for servicing the receiver. The ratings of all resistors, capacitors, coils, etc., are indicated adjacent to the symbols signifying these parts on the diagrams. The coils, reactors and transformer windings are rated in terms of their d-c resistances only and where the value is less than one ohm, no rating is given. Identification titles such as R-3, L-2, C-1, etc., are provided for reference between the illustrations and replacement parts list.

Alignment Procedure

There are a total of fourteen adjustments necessary for obtaining proper alignment when such a process becomes necessary. Four of these are involved with the i-f system and the remainder are associated with the antenna, first detector and oscillator coils.

Correct performance of the receiver can only be obtained when the trimmer adjustments have been made by a skilled service man with the use of adequate and reliable test equipment. Such apparatus as may be required for this particular instrument is illustrated and described on a separate page of this booklet.

Two methods of alignment are applicable. One utilizes a Cathode-Ray Oscillograph as a means of output indication and the other follows former procedure where a glow type indicator or meter is used. The oscillographic method is much to be preferred, since greater accuracy is possible from the type of indication afforded. There are no approximations necessary as with the meter or aural method, but each adjustment can be made with excellent precision. Both methods are hereinafter outlined so that alignment operations may be made according to the equipment available.

It is wise to determine the necessity for alignment as well as the direction of misalignment before making adjustments. The RCA Tuning Wand is an instrument designed particularly for such a purpose.

The Tuning Wand consists of a bakelite rod having a small brass cylinder at one end and a core of finely divided iron at the other. It may be inserted into a tuned coil while a signal of the normal resonant frequency is being supplied to such coil to obtain an indication of the tuning. Holes are provided at the top of the r-f shield cans for entrance of the Wand. The presence of either end of the Wand will cause a change in tuning which will be indicated at the receiver output as an increase or decrease in signal level. If there is a decrease of output when either end is inserted, the tuning is correct and will require no adjustment. However, should there be an increase of output due to the iron core and decrease with the brass cylinder, an increase in inductance or capacitance is indicated as necessary to bring the circuit into line. The trimmer involved should therefore be increased accordingly. If the brass cylinder end causes an increase in output while the iron end causes a decrease, reduction of inductance will be necessary to place the circuit in alignment. This is equivalent to decreasing the trimmer concerned. The following tabulation gives the various changes and the adjustments required:—

WAND	SIGNAL	TRIMMER
Brass	Decrease	None
Iron	Decrease	
Brass	Increase	Decrease
Iron	Decrease	
Brass	Decrease	Increase
Iron	Increase	

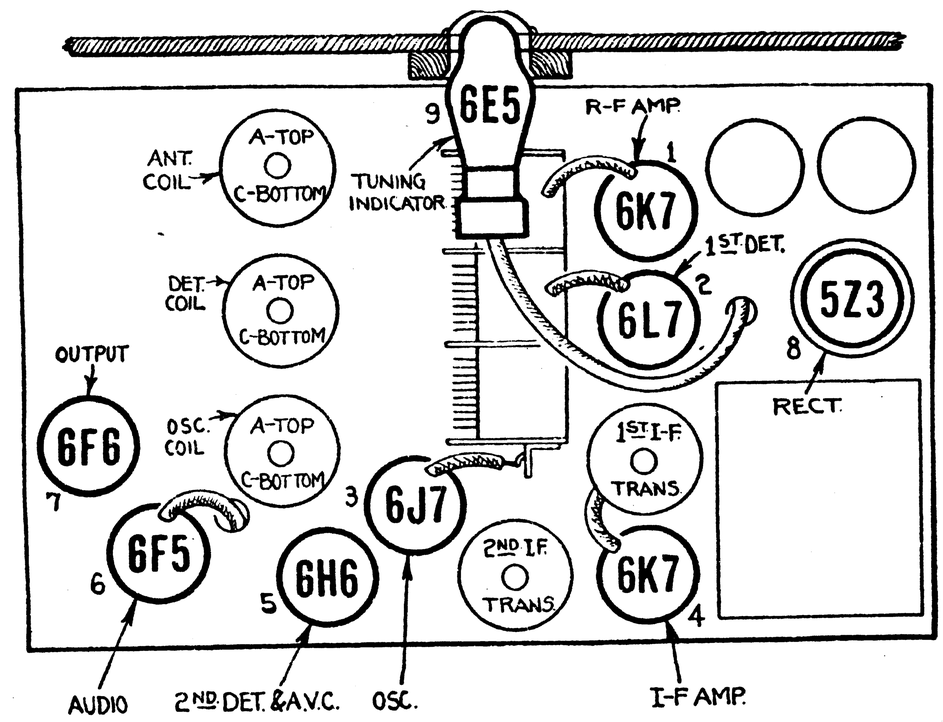

Figure 4—Coil and Radiotron Locations

(1) CATHODE-RAY ALIGNMENT

Equipment

A standard source of the specified alignment frequencies is required. Such a source should consist of an RCA Full Range Oscillator, Stock No. 9595. Output indication should be by means of an RCA Stock No. 9545 Cathode-Ray Oscillograph. An RCA Stock No. 9558 Frequency Modulator will be needed to sweep the generated signal and synchronize it with the Oscillograph in order to make possible the visual representation of the resonant characteristic of the circuit being tuned on the cathode-ray fluorescent screen.

I-F Trimmer Adjustments

The four trimmers of the two i-f transformers are located as shown by Figure 6. Each must be aligned to a basic frequency of 460 kc. The last transformer must be aligned firstly and the first transformer aligned secondly. For such a process, it is necessary to feed the output of the Full Range Oscillator to the stages in their order of alignment, adjusting the trimmers of each transformer and observing the effect at the second detector output on the Cathode-Ray Oscillograph. The proper point of connection of the Oscillograph is with its vertical "high" input terminal attached to the juncture of R-7, R-8 and R-9 as illustrated in Figure 6, and with the "0" or ground terminal to the chassis. The "Ext. Sync." terminals of the Oscillograph should be connected to the Frequency Modulator as shown by

Figure 5. A .001 mfd. capacitor installed in series with the Oscillator "Ant." lead will prevent the voltages of the stage under alignment from becoming upset. The vertical "A" amplifier should be "On" for the ensuing adjustments and the gain control kept at its maximum position. For each adjustment, the Oscillator output need be regulated so that the image obtained

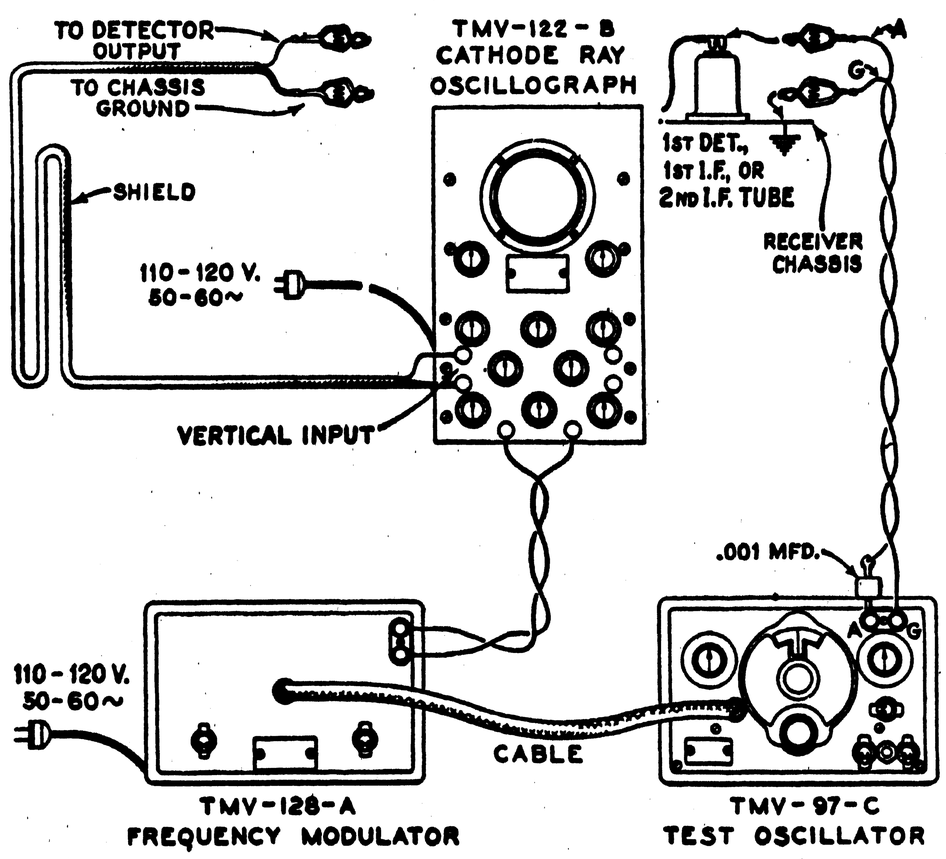

Figure 5—Alignment Apparatus Connections

on the Oscillograph screen will be of sufficient size as to be accurately observable. Proceed further as follows:—

(a) Place the receiver, Oscillograph and test Oscillator in operation. Set the receiver range switch to Band "A" and tune the station selector to a point where no interference will be picked up, shorting the antenna and ground terminals if necessary. Set the Oscillograph horizontal "B" amplifier to "Timing" and control its gain so that the luminescent spot sweeps a straight line trace completely across the screen. Place the timing control to "Int." Adjust the intensity and focusing controls of the Oscillograph to produce the correct size and strength of the spot.

(b) Attach the output of the test Oscillator between the control grid cap of the RCA-6K7 i-f tube and chassis ground as shown typically by Figure 5. Tune the Oscillator to **460 kc.** and set its modulation switch to "On". Regulate its output until the signal produces a wave pattern on the Oscillograph screen, adjusting the Oscillograph controls to give the desired number of cycles. Cause the image to stand still on the screen by manipulation of the frequency and synchronizing controls. Then carefully tune the two trimmers C-29 and C-30 of the second i-f transformer to produce maximum amplitude (vertical deflection) of the oscillographic image. Under this condition the transformer will be sharply resonated to 460 kc.

(c) The Frequency Modulator should then be placed in operation and interconnected with the Full Range Oscillator by means of the special shielded patch cord. Figure 5 shows the proper arrangement. Set the Frequency Modulator sweep range switch to its "Lo" position and turn the Oscillator modulation switch to "Off". Change the timing control of the Oscillograph to "Ext." and place the range switch to its No. 2 position. Then carefully shift the tuning of the Oscillator so as to increase its frequency, until two distinct and similar waves appear on the Oscillograph screen and become exactly coincident at their highest points. These curves will be found to occur at an Oscillator setting of *approximately* 540 *kc.* They will be identical in shape but appearing in reversed positions. Adjust the frequency control of the Oscillograph in order to cause the waves to conform with the above requirements and to make them remain motionless on the screen. This will require a setting of approximately ½ clockwise rotation of the frequency control. The trimmers C-29 and C-30 should then be re-adjusted so that the two curves move together and become exactly coincident throughout their lengths, maintaining the maximum amplitude at which this condition can be brought about.

(d) Leaving the equipment connected and adjusted as in (c), change the Oscillator output to the control grid cap of the RCA-6L7 first detector tube. Then adjust the first i-f transformer trimmers C-24 and C-25 so that the forward and reverse waves appearing on the Oscillograph coincide throughout their lengths and have maximum amplitude. The shape of the composite wave obtained from this operation is a true representation of the overall tuning characteristic of the i-f system. Each trimmer of the entire group should then be checked to assure that it is in correct alignment as indicated by the degree of coincidence and relative amplitude of the image on the Oscillograph screen.

R-F Trimmer Adjustments

Locations of the various antenna, detector and oscillator coil trimmers are shown by Figure 6. The test Oscillator should be removed from connection with the i-f system and its output connected to the antenna-ground terminals of the receiver. No changes are to be made in the connections of the Oscillograph at the second detector. During the following adjustments, the Oscillator output should be regulated as often as is necessary to keep the oscillographic image as low as is practically observable. Adherence to such a procedure will obviate the broadness of tuning that would result from a.v.c. action on a stronger signal. Proceed with the adjustments as follows:—

Calibration

Set the receiver range switch to Band A and rotate the station selector until the tuning condenser plates are in full mesh (maximum capacitance). Then move the main dial pointer until it points exactly to the horizontal line at the low frequency end of the Band A scale.

Band A

(a) With the receiver range switch in its Band A position, tune the station selector until the dial pointer is at a reading of **1720 kc.** Adjust the test Oscillator to **1720 kc.** (modulation "On" and Frequency Modulator disconnected) and increase its output to produce a registration on the Oscillograph. Carefully align the oscillator, detector and antenna trimmers C-20, C-10 and C-3 respectively, so that each brings about maximum amplitude of output as shown by the wave on the Oscillograph. It will be necessary to have the timing control of the Oscillograph on "Int." for this operation. After each trimmer has been peaked, the Oscillograph timing control should be set to "Ext." and the Frequency Modulator placed into operation with its connections to the Oscillator and Oscillograph made in accordance with Figure 5. Turn the modulation switch of the Oscillator to "Off" and retune the Oscillator (increase frequency) until the forward and reverse waves show on the Oscillograph and become coincident at their highest points. Adjust the trimmers C-20, C-10 and C-3 again, setting each to the point which produces the best coincidence and maximum amplitude of the wave images.

(b) Remove the Frequency Modulator cable from the Oscillator and shift the signal frequency to **600 kc.** Place the modulation switch to "On". Tune the receiver to pick up this signal, disregarding the dial reading at which it is best received. Then insert the Frequency Modulator plug and retune the Oscillator (modulation "Off") until the two similar forward and reverse waves appear on the screen. For this adjustment, it is advisable to shift the Oscillator to its 200—400 kc. range and use the third harmonic of the generated signal in order to obtain the desired range of sweep. The oscillator series trimmer C-19 should then be adjusted to produce maximum amplitude of the images. No rocking will be necessary on the station selector inasmuch as the signal frequency is being "wobbled" by the Frequency Modulator to produce the same effect.

After completing this adjustment the trimmer C-20 should be re-aligned as in (a) to correct for any change brought about by the adjustment of C-19.

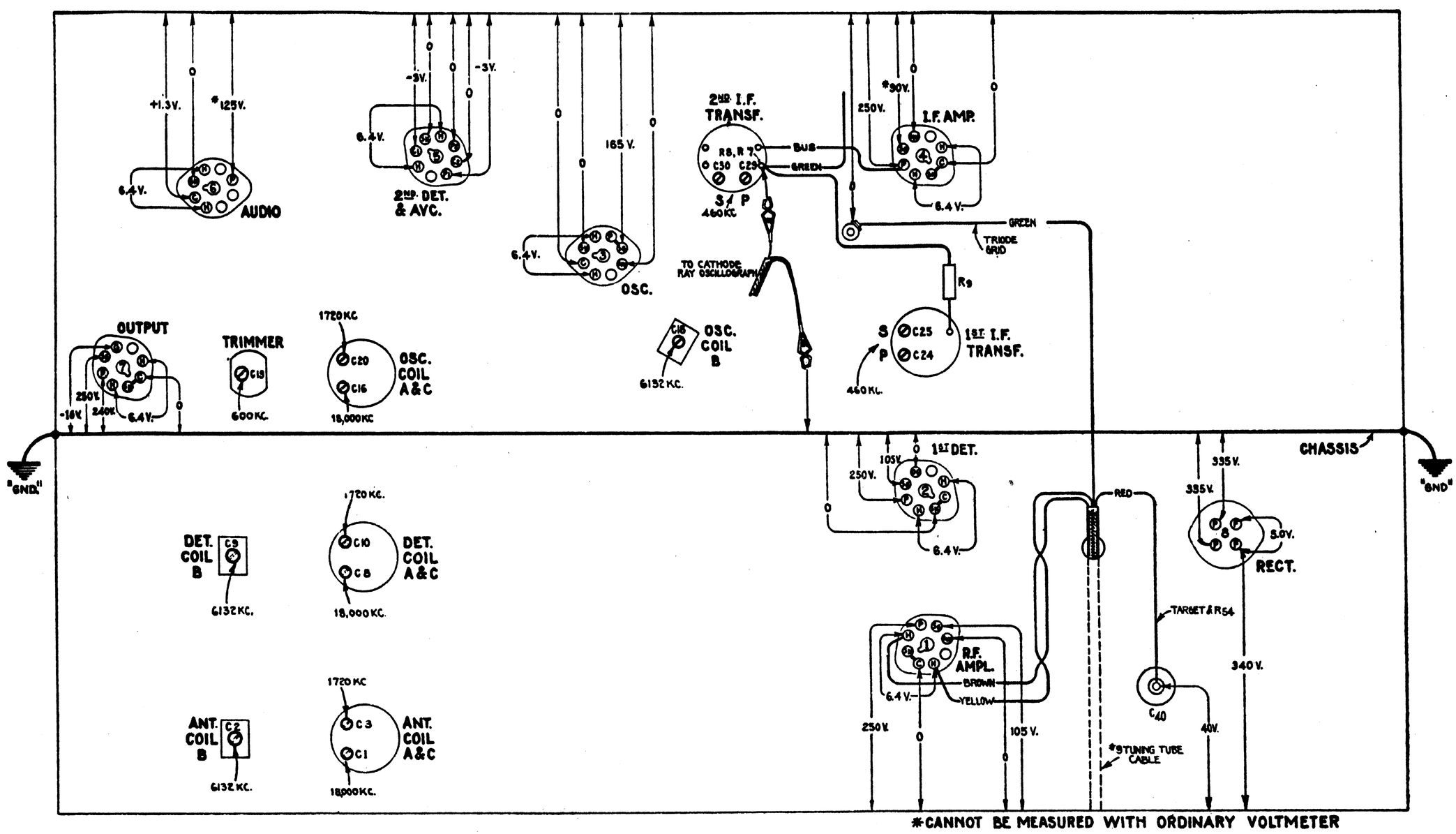

Figure 6—Trimmer Locations and Radiotron Socket Voltages
Measured at 115 volts A.C.—No Signal—Volume Control Maximum

Band B

(a) Advance the receiver range switch to its Band B position and tune the station selector to a dial reading of **6132 kc.** Set the test Oscillator to this same frequency (modulation "On" and Frequency Modulator disconnected) and increase its output until a suitable indication is apparent on the Oscillograph. The Oscillograph should be adjusted for "Int." timing. Then adjust the oscillator trimmer C-18 to the point at which maximum amplitude of the image is obtained. Two points will be found for this trimmer which give such a maximum. The one of least capacitance is correct and should be used. This can be checked by tuning the "image" signal, which will be received at **5212 kc.** on the dial if the adjustment of C-18 has been properly made. An increase in test Oscillator output may be necessary for this test, however, *its frequency should not be changed from* **6132 kc.** *nor any trimmer adjustments made on the receiver.*

(b) Return the station selector to the **6132 kc.** reading and align the detector, and antenna coil trimmers, C-9 and C-2 respectively, for maximum (peak) output as shown by the Oscillograph. No further adjustments are to be made on this band.

Band C

(a) Turn the range switch of the receiver to its Band C position and tune the station selector until the dial pointer reads **18,000 kc.** Set the test Oscillator to the same frequency (modulation "On" and Frequency Modulator disconnected) and regulate its output to the level required for convenient observation. Adjust the trimmer C-16 to the point producing maximum output as indicated on the Oscillograph. Check for the presence of the proper "image" signal by tuning the receiver to **17,080 kc.** The **18,000 kc.** signal of the Oscillator will be received at this point if the adjustment of C-16 has been properly made using the position of least capacitance which gives maximum receiver output. It may be necessary to increase the output of the Oscillator in order to get an indication of the "image". *No adjustments should be made during this check.*

(b) Return the receiver tuning to **18,000 kc.**, realign C-16 if necessary, and then adjust the detector and antenna trimmers, C-8 and C-1, for maximum signal output as evidenced by the oscillographic image. No further adjustments are to be made on this band.

(2) ALIGNMENT WITH OUTPUT METER

To align the receiver by means of an output indicator other than a Cathode-Ray Oscillograph will require the use of a standard test Oscillator such as that recommended above for the source of signals and means of indication for the output. The RCA Neon Output Indicator, Stock No. 4317 will be found very satisfactory for such use. It should be connected across the voice coil circuit of the loudspeaker or across the output transformer primary.

I-F Alignment

Connect the test Oscillator to the control grid cap of the i-f tube. Advance the volume control of the receiver to its full-on position. Tune the test Oscillator accurately to **460 kc,** and align the trimmers C-29 and C-30 to give maximum receiver output. Regulate the Oscillator output during this adjustment so that the output indi-

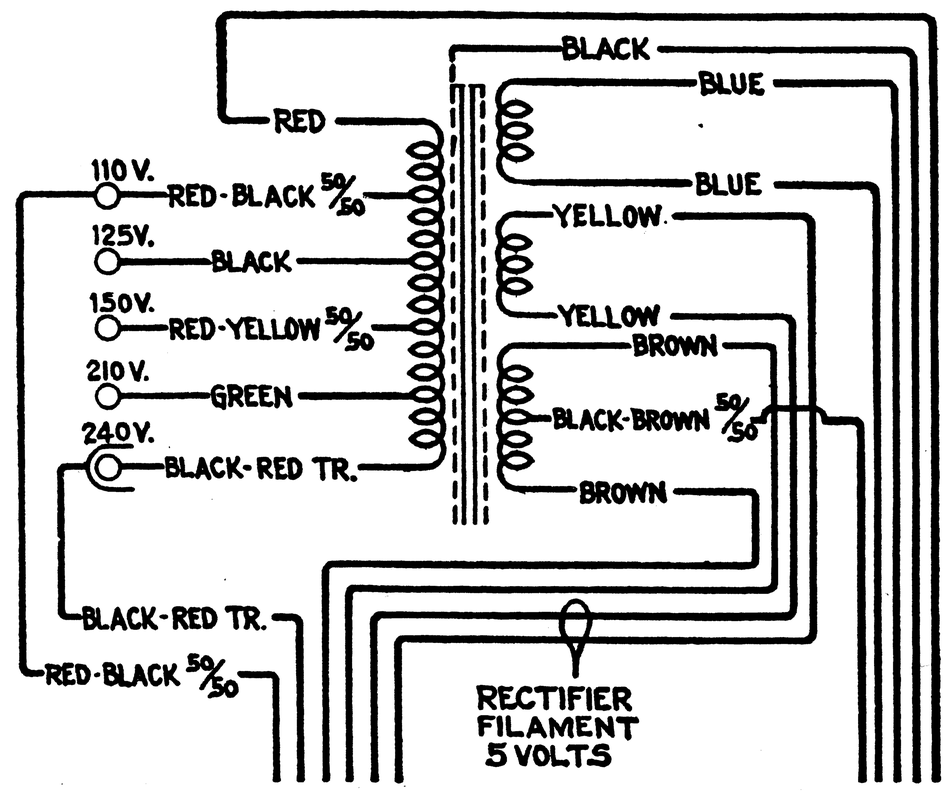

Figure 7—Universal Power Transformer Connections
Pri. Res.—10.3 Ohms, Total
Sec. Res.—383 Ohms, Total

cation is as small as can be conveniently observed. After completing the adjustments of these trimmers, re-connect the Oscillator so that it will feed into the control grid circuit of the RCA-6L7 first detector. Then tune the first i-f transformer trimmers C-24 and C-25 for maximum receiver output.

R-F Alignment

After completing the i-f adjustments, it is advisable to correct the line-up of the circuits ahead of the first detector. The test Oscillator should be connected to the antenna-ground terminals of the receiver and the manual volume control kept at its maximum position. For each adjustment the Oscillator output should be maintained as low as possible in order to avoid broadness of tuning which would result from a.v.c. action on a stronger signal. **Band A** should be aligned by supplying a **1720 kc.** signal to the receiver, tuning the station selector to a dial reading of **1720** and adjusting the trimmers C-20, C-10 and C-3 to produce maximum receiver output. The Oscillator should then be shifted to **600 kc.** and the receiver tuned to resonate this signal, disregarding the reading at which it is best received. Trimmer C-19 must then be adjusted, simultaneously while rocking the station selector backward and forward through the signal until the maximum output results from the combined operations. C-20 should be rechecked to assure that its adjustment has not changed because of the trimming of C-19. **Band B**

must be aligned at **6132 kc.** by tuning the test Oscillator to such a frequency and turning the station selector to the same dial reading. Tune the trimmer C-18 to produce maximum receiver output, using the setting of least capacitance which causes same. The presence of the proper "image" may be checked by tuning the receiver to **5212 kc.** at which point the **6132 kc.** signal will be heard if the trimmer C-18 has been properly set to the position of least capacitance for maximum (peak) output. It may be necessary to increase the Oscillator output for this check. *No adjustments are to be made.* Return the station selector to the **6132 kc.** dial marking and trim capacitors C-9 and C-2 for maximum receiver output. No other adjustments are necessary on Band B. Change the receiver so that it is operative and the dial reads **18,000 kc.** on the **"C" Band.** Tune the test Oscillator to this same frequency. Then adjust the oscillator trimmer C-16 to produce maximum (peak) output. Two positions of this trimmer will be found which conform with this requirement. The one of least capacitance is correct. Check for the presence of "image" response at **17,080 kc.** by shifting the receiver tuning. If it is received at such a point, the trimmer C-16 has been correctly adjusted to the right peak. *No adjustments are to be made during this check.* Tune the receiver back to the **18,000 kc.** dial marking, re-adjust C-16 if necessary, and then tune the detector and antenna capacitors C-1 and C-8 for maximum receiver output. No further adjustments are necessary.

Radiotron Socket Voltages

The voltage values indicated from the Radiotron socket contacts to chassis on Figure 6 will serve to assist in the location of causes for faulty operation. Each value as specified should hold within ± 20% when the receiver is normally operative at its rated supply voltage. Variations in excess of this limit will usually be indicative of trouble in the basic circuits. The voltages given are actual operating values and do not allow for inaccuracies which may be caused by the loading effect of a voltmeter's internal resistance. This resistance should be duly considered for all readings. The amount of circuit resistance shunting the meter during measurement will determine the accuracy to be obtained, the error increasing as the meter resistance becomes comparable to or less than the circuit resistance. For the majority of readings, a meter having an internal resistance of 1000 ohms per volt will be satisfactory when the range used for each reading is chosen as high as possible consistent with good readability.

Universal Transformer

The transformer used on some models of these receivers is adaptable to several ranges of voltage as given under rating C of Electrical Specifications. Its schematic and wiring are shown by Figure 7. Terminals are provided at the top of the transformer case for changing the primary connections to suit the voltage being used.

REPLACEMENT PARTS

Insist on genuine factory tested parts, which are readily identified and may be purchased from authorized dealers.

Stock No.	Description	List Price
	RECEIVER ASSEMBLIES	
4427	Bracket—Volume control or high frequency tone control mounting bracket.	$0.18
5237	Bushing—Variable tuning condenser mounting bushing assembly—Package of 3	.43
11350	Cap—Contact cap—Package of 5	.20
11223	Capacitor—Adjustable capacitor (C19)	.46
11292	Capacitor—22 MMfd. (C7)	.24
11321	Capacitor—33 MMfd. (C33)	.26
11289	Capacitor—50 MMfd. (C11)	.26
11291	Capacitor—115 MMfd. (C21)	.24
11623	Capacitor—175 MMfd. (C31)	.18
5116	Capacitor—175 MMfd. (C35)	.18
4409	Capacitor—1120 MMfd. (C38)	.35
11288	Capacitor—1225 MMfd. (C17)	.30
11287	Capacitor—4500 MMfd. (C15)	.30
4868	Capacitor—0.005 Mfd. (C34, C44)	.20
4624	Capacitor—0.01 Mfd. (C32)	.54
4858	Capacitor—0.01 Mfd. (C37)	.25
5196	Capacitor—0.035 Mfd. (C43)	.18
4836	Capacitor—0.05 Mfd. (C4, C13, C26)	.30
4886	Capacitor—0.05 Mfd. (C51)	.20
4885	Capacitor—0.1 Mfd. (C6, C12, C27)	.28
5170	Capacitor—0.25 Mfd. (C23, C28, C36, C50)	.25
11240	Capacitor—10 Mfd. (C39)	1.08
5212	Capacitor—18 Mfd. (C40)	1.16
11272	Clamp—Antenna cable clamp—Located near antenna terminal	.10
5215	Coil—Antenna coil (A and C Bands)—(L1, L2, L5, L6, C1, C3)	2.32
5245	Coil—Antenna coil (B Band)—(L3, L4, C2)	1.58
5216	Coil—Detector coil (A and C Bands)—(L7, L8, L11, L12, C8, C10)	2.34
5246	Coil—Detector coil (B Band)—(L9, L10, C9)	1.62
5217	Coil—Oscillator coil (A and C Bands)—(L13, L15, C16, C20)	2.20
5247	Coil—Oscillator coil (B Band)—(L14, C18)	1.44
11214	Condenser—3-gang variable tuning condenser (C5, C14, C22)	4.20
4340	Lamp—Dial lamp—Package of 5	.60
8041	Plate—R.F. or I.F. coil shield locking plate—Package of 2	.12
11244	Resistor—Voltage divider resistor, comprising one 7500 ohm and one 9200 ohm section—(R18, R19)	1.08
11329	Resistor—Voltage divider resistor, comprising one 148 ohm, one 32 ohm and one 85 ohm section—(R15, R16, R17)	.52
5112	Resistor—1000 ohm—Carbon Type—1/4 watt—(R2)—Package of 5	1.00
5114	Resistor—15,000 ohm—Carbon Type—1 watt—(R5)	.22
11300	Resistor—33,000 ohm—Carbon Type—1/10 watt—(R4)—Package of 5	.75
5033	Resistor—33,000 ohm—Carbon Type—1 watt—(R51)—Package of 5	1.10
11322	Resistor—39,000 ohm—Carbon Type—1/4 watt—(R10)—Package of 5	1.00
5029	Resistor—56,000 ohm—Carbon Type—1/4 watt—(R13, R21)—Package of 5	1.00
3118	Resistor—100,000 ohm—Carbon Type—1/4 watt—(R1, R3, R6, R50)—Package of 5	1.00
11323	Resistor—270,000 ohm—Carbon Type—1/4 watt—(R12)—Package of 5	1.00
11172	Resistor—470,000 ohm—Carbon Type—1/4 watt—(R14)—Package of 5	1.00
11151	Resistor—2.2 megohms—Carbon Type—1/4 watt—(R9, R52, R53)—Package of 5	1.00
5249	Shield—Antenna, detector or oscillator coil shield	.20
5250	Shield—Intermediate frequency transformer shield	.22
11222	Socket—Dial lamp socket	.18
11195	Socket—5-contact rectifier radiotron socket	.15
11313	Socket—5-contact radiotron socket	.18
11198	Socket—7-contact radiotron socket	.15
11236	Switch—Band switch (S1, S2, S3, S4, S5, S6, S7, S8, S9, S10, S11)	2.44
5224	Switch—Tone control and power switch (S12, S14)	1.00
5238	Terminal—Antenna terminal clip assembly	.14
11238	Tone Control—High frequency tone control (R20)	.96
11216	Transformer—First intermediate frequency transformer (L16, L17, C24, C25)	2.15
11239	Transformer—Second Intermediate frequency transformer (L18, L19, C29, C30, C31, R7, R8)	2.72
11803	Transformer—Power transformer—105-125 volts—50-60 cycles (T1)	4.38
11804	Transformer—Power transformer—105-125 volts—25-60 cycles	6.02
11805	Transformer—Power transformer—100-130, 140-160, 195-250 volts—40-60 cycles	7.95
11237	Volume Control—(R11)	1.20
	DRIVE ASSEMBLIES	
4362	Arm—Band indicator operating arm	.28
10194	Ball—Steel ball—Package of 20	.25
4422	Clutch—Tuning condenser drive clutch assembly—comprising drive shaft, balls, ring, spring and washers—assembled	1.00
11328	Dial—Dial scale	.68
11252	Drive—Variable tuning condenser drive assembly	1.88
4520	Indicator—Station selector indicator pointer	.18
11226	Indicator—Band indicator pointer assembly—comprising indicator pointer, arm, link and stud	.20
3993	Screw—No. 6-32-5/32-in. square head set screw for band indicator operating arm—Package of 10	.25
4669	Screw—No. 8-32-5/32-in. set screw for variable condenser drive assembly—Package of 10	.25
4377	Spring—Band indicator operating arm spring—Package of 5	.25
4378	Stud—Band indicator operating arm stud and nut assembly—Package of 5	.25
	REPRODUCER ASSEMBLIES Table Model	
11232	Board—Terminal board with two lead wire clips	.18
11231	Bolt—Yoke and core assembly bolt and nut	.16
8060	Bracket—Output transformer mounting bracket	.14
11257	Clamp—Cone center suspension clamping nut and screw assembly—Package of 5	.25
11254	Coil—Field coil (L20)	2.00
11233	Coil—Neutralizing coil (L21)	.30

The prices quoted above are subject to change without notice.

REPLACEMENT PARTS—Continued

Stock No.	Description	List Price
11235	Cone—Reproducer cone—(L22)—Package of 5	3.50
5119	Connector—3-contact female connector for reproducer cable	.25
5118	Connector—3-contact male connector for reproducer	.25
9618	Reproducer—Complete	6.40
11253	Transformer—Output transformer (T2)	1.56
11886	Washer—Spring washer used to hold field coil securely—Package of 5	.20
	REPRODUCER ASSEMBLIES Console Models	
11232	Board—Terminal board assembly with two lead wire clips	.18
11231	Bolt—Yoke and core assembly bolt and nut	.16
8060	Bracket—Output transformer mounting bracket	.14
11257	Clamp—Cone center suspension clamping nut and screw assembly—Package of 5	.25
11254	Coil—Field coil (L20)	2.00
11233	Coil—Hum neutralizing coil (L21)	.30
11258	Cone—Reproducer cone—(L22)—Package of 5	3.85
5118	Connector—3-contact male connector for reproducer	.25
5119	Connector—3-contact female connector plug for reproducer cable	.25
9619	Reproducer—Complete	6.05
11253	Transformer—Output transformer (T2)	1.56
11886	Washer—Spring washer used to hold field coil securely—Package of 5	.20

Stock No.	Description	List Price
	MISCELLANEOUS ASSEMBLIES	
11996	Bracket—Tuning tube mounting bracket and clamp assembly	.22
11331	Cable—Tuning lamp cable—complete with socket	1.28
11276	Escutcheon—Tuning lamp escutcheon	.40
11337	Escutcheon—Station selector escutcheon	.70
6614	Glass—Station selector dial glass	.30
11346	Knob—Station selector knob—Package of 5	.75
11347	Knob—Volume control, tone control, range switch or power switch knob—Package of 5	.75
11246	Foot—Chassis mounting foot and bracket assembly—Package of 2	.76
11382	Resistor—1 megohm—Carbon Type—1/10 watt (R54)—Package of 5	.75
4678	Ring—Spring retaining ring for dial glass—Package of 5	.34
5210	Screw—Chassis mounting screw assembly—for console model—Package of 4	.16
11210	Screw—Chassis mounting screw assembly—for table model—Package of 4	.28
11348	Screw—No. 8-32-7/16-in. headless cupped point set screw for knob, Stock No. 11346—Package of 10	.32
11381	Socket—Tuning lamp socket and cover	.45
11349	Spring—Retaining spring for knob, Stock No. 11347—Package of 5	.15

The prices quoted above are subject to change without notice.

SERVICE HINTS

(1) Excessive heating of the 6E5 tube may be due to high cathode current—in excess of 7 ma. The tube should be replaced and the condition of the 5Z4 rectifier checked.